ALBO - HS - slading glass wall
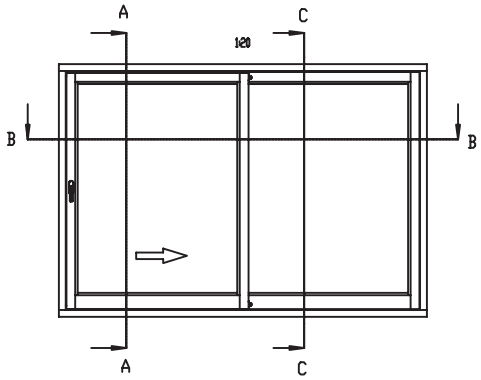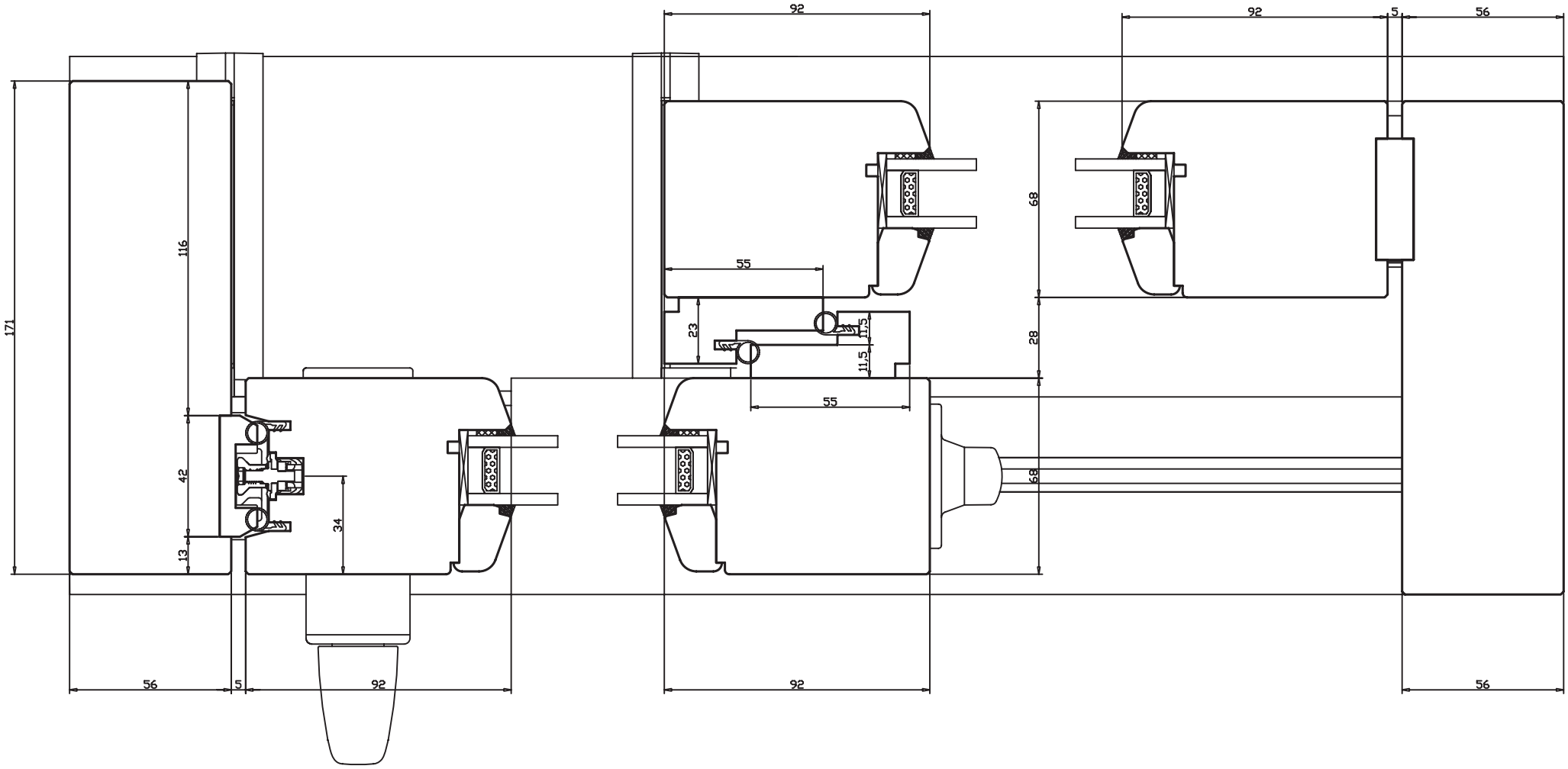
Cut section B-B
scale 1:2